KOI 4 Sheeter by Ron Petralito

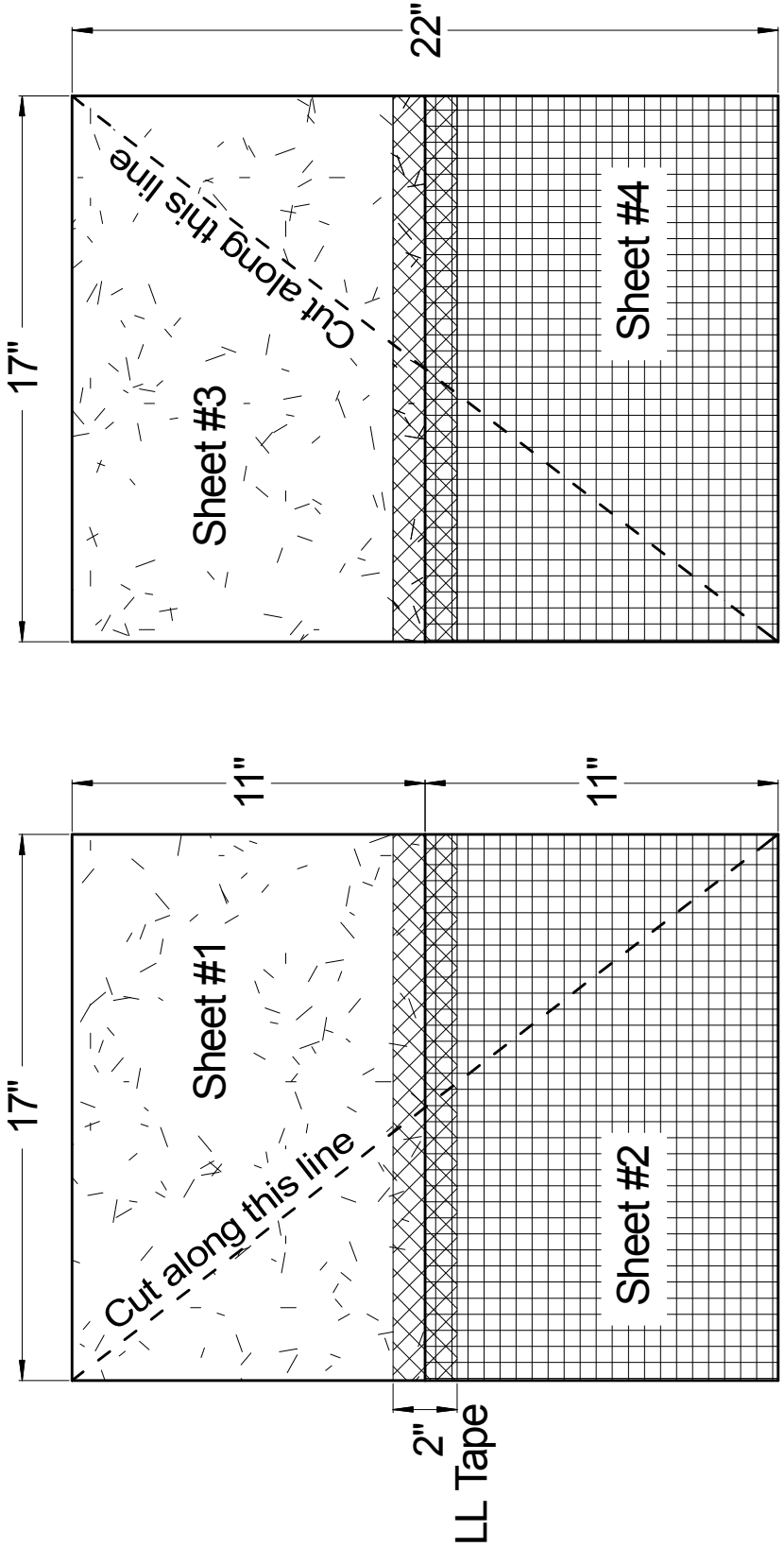

Figure 1

Figure 2

BACK SIDE VIEW

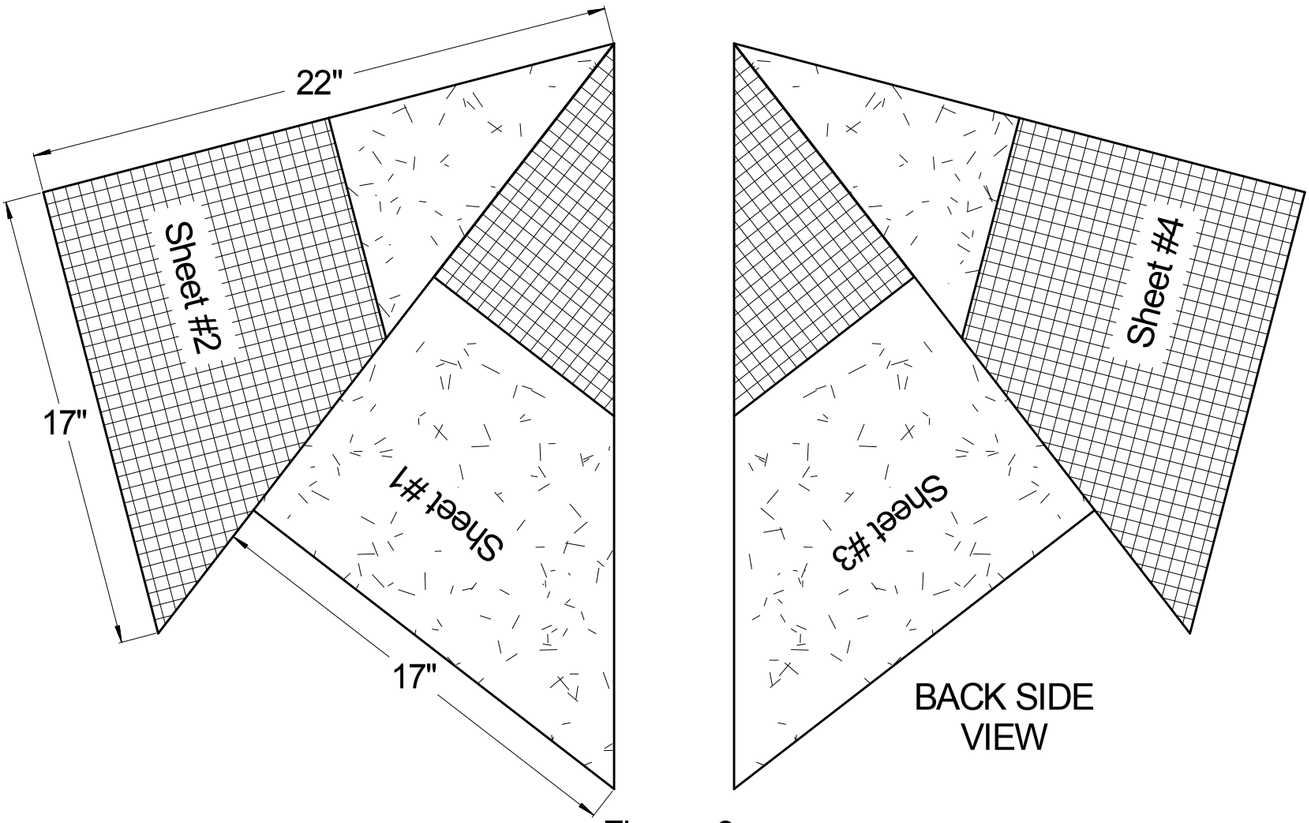

Figure 3

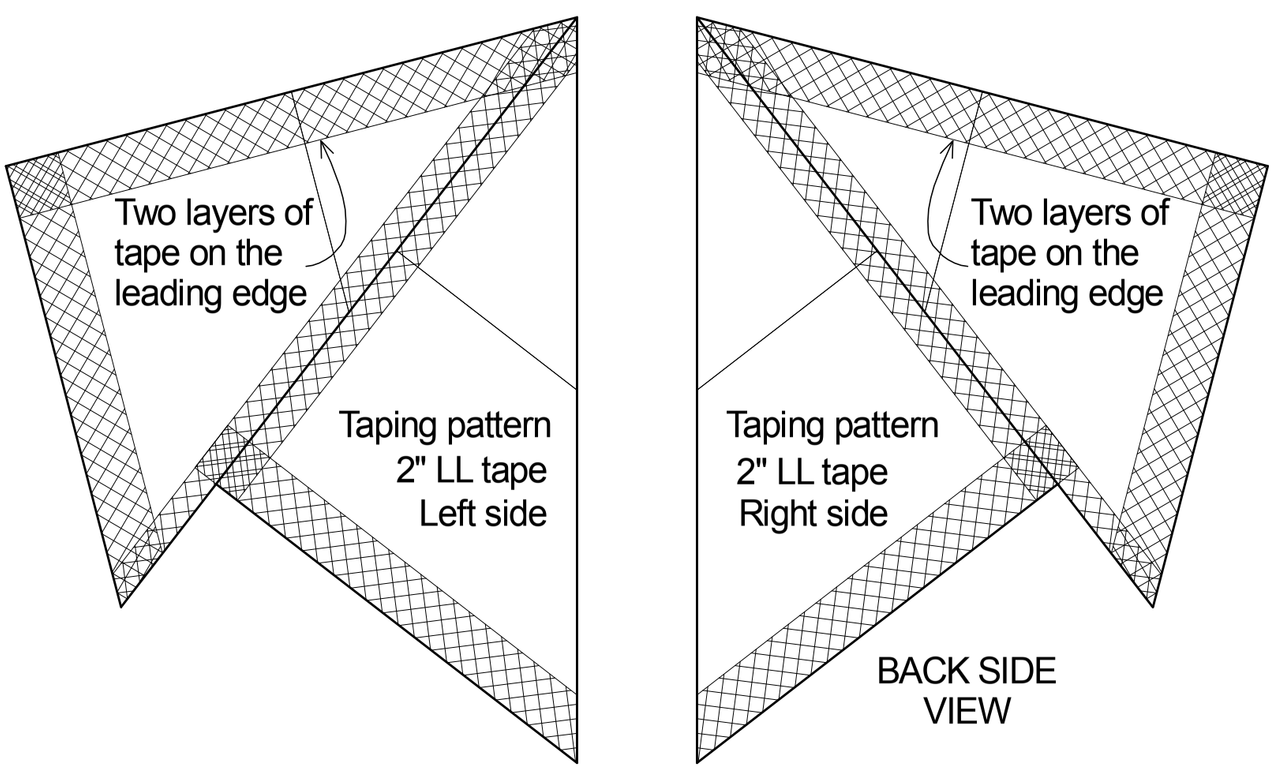

Figure 4

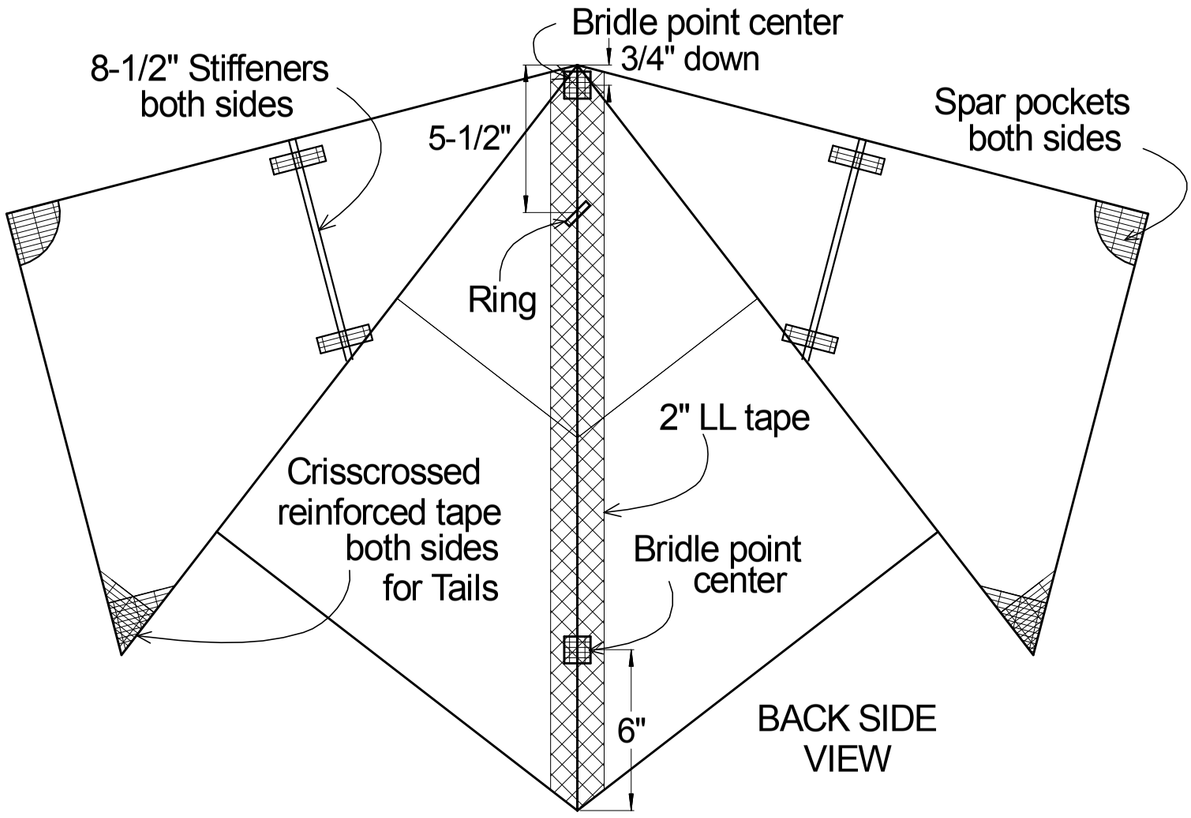

Figure 5

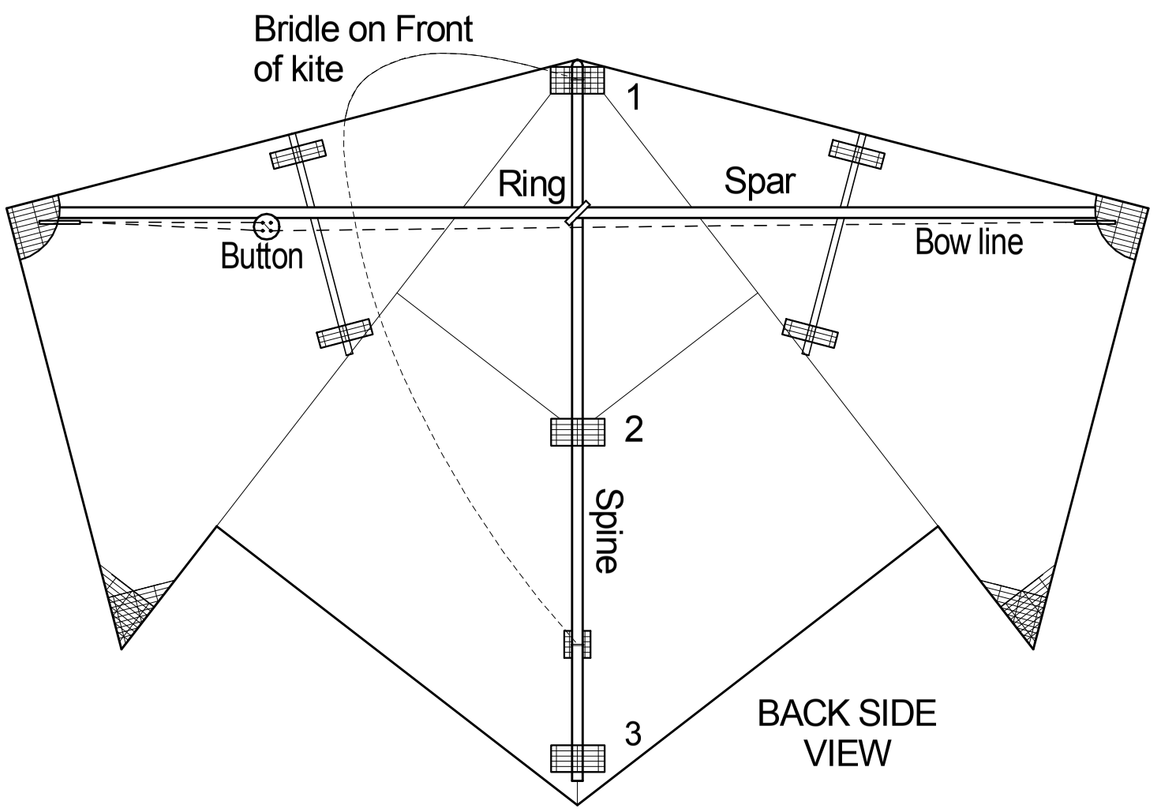

Figure 6

Materials List

4 sheets of 11”x17” white or colored paper 24#
(FedEx Office store sells individual sheets)
2 1½”x1½” squares of white or colored paper
(card stock if available)
1 ¼” wooden dowel, 42¼” long
1 ¼” wooden dowel, 27⅜” long
2 3/16” wooden dowels 8½” long
(or ⅛”dia. bamboo skewers 8½” long)
1 can of clear lacquer spray
(preferably semi-gloss but gloss will also work)
1 2” Scotch “Moving and Storage – Long Lasting” (LL) tape roll (1.88” x 38.2 yds.)
1 2” Scotch “Shipping” Reinforced Strapping (RS) tape roll
(2” x 360”)
1 approx. ¾” diameter metal key ring
1 approx. ½” diameter 4 hole button
1 12’ of approx. 30# kite line
5 #5 brass snap swivels

Tools Required

1 Sheet of 100 - 120 grit sandpaper
1 Scissors
1 Utility knife
1 Metal yard stick
1 Ball point pen and pencil
1 12” ruler
1 Push pin or awl (to punch holes)
1 Rectangular pink eraser
(to back up the paper when punching holes)
1 Roll of masking or blue painters tape
(to temporarily hold paper in place while taping)

The wooden dowels and the paper need to be prepared before assembly begins. Dowels need to be sanded and given two coats of lacquer spray and the four sheets of 11”x17” paper also need to receive two medium-light coats of lacquer on each side. If you spray to heavily the paper may become too brittle. Always spray only in a well ventilated area. Lacquer dries very quickly and this should not take long. I like spraying out on the lawn if the conditions are right and the grass is totally dry.

NOTE: In all cases this sail will be assembled by carefully aligning the paper edges, temporarily attaching them to the work surface and fastening them together with the 2” Scotch Long Lasting (LL) tape. (This is a very good tape for kite building with paper.) Also note that the sheets #1 & #3, and #2 & #4 are the same colors.

Creating the four triangles that comprise the complete sail. Place the four sheets of paper on the work surface and fasten each set using LL tape as shown in Figures 1 and 2. Then cut along the lines as indicated. It is important that these cuts be made straight and accurately. Reassemble the resulting triangles according to Figure 3 and fasten them together according to the taping pattern indicated in Figure 4. Trim all tape overrun flush with the papers edge.

For ease of handling attach the spar pockets before joining the left and right sides of the sail. See Figure 5 for their locations. From a sheet of paper (matching the color of sheets 2&4 looks best, but white will do fine) cut two 1½” x 1½” squares and cover each side with LL tape. Cut four lengths of Scotch Reinforced Strapping (RS) tape 1½” x 3½”. Adhere one strip to the front of the sail (non-taped side) 1½” from the corner and attach one of the 1½” x 1½” squares as shown in Photo 1. Fold the tape with the firmly attached square around to the back side of the sail (taped side) as in Photo 2, and lightly fasten the overhanging tape in place as in Photo 3.

Then firmly attach the second piece of 1½” x 3½” RS tape on the front of the sail (non-taped side) placing it over the first piece crisscrossing the fibers as shown in Photo 4. Turn the sail over as in Photo 5. Fold that tape tightly around the edge and press it firmly onto the existing tape. Repeat the above process with the two remaining strips of 1½” x 3½” tape, thus doubling the layers in each direction. Next draw a curved line from opposite corners, as in Photo 6. The final step is to pry up the tape edges overhanging the square paper and cut along the line (Photo 7), thus completing this spar pocket. Repeat the above instructions to make the second spar pocket. (I believe this spar pocket detail is one of the most significant improvements I have made on my kites in the past year. It’s simple, easy to build and works every time, as long as you keep the angle of the corner between 45° and 90°).

To create each tail reinforcements area place two strips of 2” wide RS tape each lining up with the corner and each perpendicular to one edge (Figure 5 and Photo 8). Cut off the point ¼” up from the end and punch a hole (with a push pin or awl) all the way through the layers ⅜” up from the cut off edge. Then install a #5 snap swivel through this hole. It will remain on the kite as an easy tail attachment point. Do this for each side of the sail.

Carefully align the left and right side of the sail and temporarily fasten them to the work surface. Place the final piece of 2” LL tape over the joint between these two sides, press firmly and trim both ends (Figure 5).

Attach the 8½” stiffeners on the back side over the joints between Sheets #1 & 2 and #3 & 4 using ½” by 2” RS tape (Figure 5). (Note: When installing tape over dowels it is important to always to use something thin to tuck the tape around its circumference, on each side, before attaching it to the sail. I like using the end of a thin plastic ruler to do this.)

To complete the sail, attach the metal ring with two ¼” x 1½” strips of RS tape in an X configuration 5½” down from the nose at a 45° angle to the lines of the spine and spar (Photo 9). This is so the spine and spar can pass through the ring easily (Figure 6). Cover this tape with two additional RS strips ¾” x 2” (Photo 9).

Next place two 1” squares each comprised of two crisscrossed layers of RS tape at each bridle point location Figure 5. (Optional: If a third tail attachment point is desired an additional RS crosshatch tail reinforcement area can be located on the sail at the base of the spine (Photo 10).

To attach the spine to the sail, begin by placing the 27⅜” spine through the metal ring and align one end with the nose of the sail and attach it in three places using 1”x 2” RS tape. The first attachment point (1) is centered over the bridle point at the nose of the kite, second (2) is where the sail color changes along the spine, and third (3) is ¼” above the end of the spine (Figure 6). (Note: The spine will not extend to the bottom of the sail to leave some room to attach another snap swivel for a possible third tail.)

To create the bow line, install the spar in the spar pockets and mark a spot on each pocket in line with the spar and ⅜” in from the edge. Remove the spar. Punch holes in each of the spar pockets at these marks by first inserting the eraser into the pocket. Fasten one snap swivel through one of these holes. Attach the line to another snap swivel and fasten it to the other spar pocket through its hole (Photo 11). Run the open end of the line through diagonal holes in the button and on through the snap swivel on the opposite spar pocket. Return that line to the button and tie it firmly there through one of the remaining holes (Photo 12).

Finally, punch holes on each side of the spine through the 1” square crisscrossed RS tape placed at the two bridle points. From the front side (non-taped side) of the kite tie each end of a 72” length of 30# kite line onto the spine through these holes (Figure 6). An adjustable tow point can be made from a 6” loop of line and a Prussik knot.

For additional possibilities in color patterns you may even use two sheets of 8½”x11” paper taped along the 11” edge to create the 11”x17” sheets used in making the sail. It might also be fun to make this kite with papers that have designs printed on them using a color copier or even hand painted.

The KOI 4 Sheeter kite can be stored, along with its spar, in a 4”x48” cardboard shipping tube purchased from the FedEx Office store. Remove the spar and carefully roll the sail up (it will be easier the second time) from one spar pocket to the other. Roll this so the spine is on the inside. Place a loosely fitting rubber band around the sail and place it, along with the spar, in the tube. Making sure both plastic ends are securely in place. On occasion I have even pop-riveted the bottoms cover to the cardboard roll to assure it will not come loose.

Kite making and flying should be fun so keep that in mind as you build this kite. I find the reward in making and flying a kite you build yourself is endless. So enjoy! k

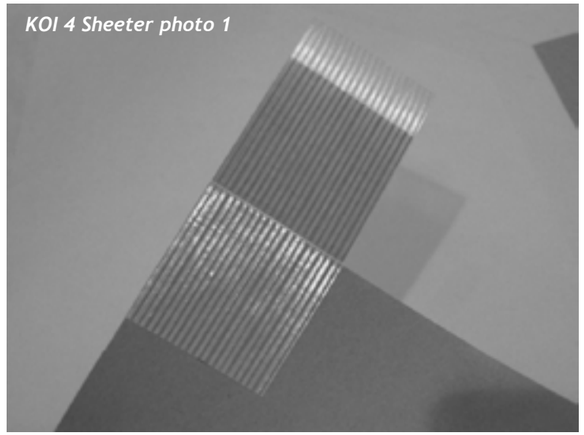
KOI 4 Sheeter photo 1

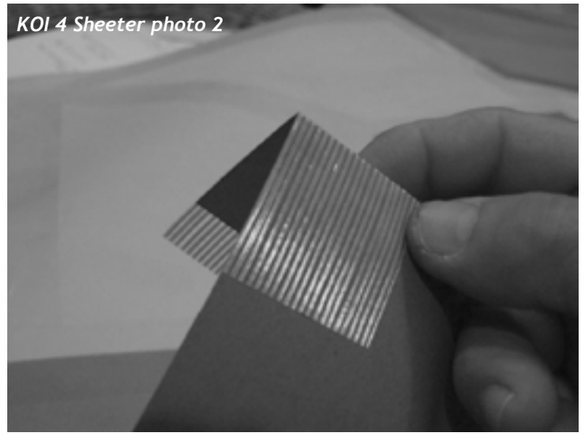
KOI 4 Sheeter photo 2

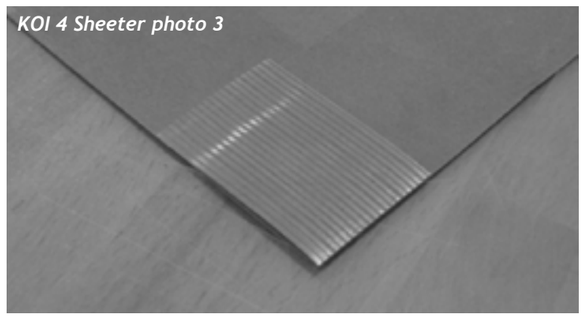
KOI 4 Sheeter photo 3

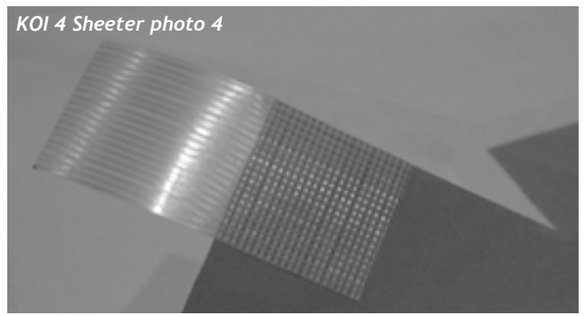
KOI 4 Sheeter photo 4

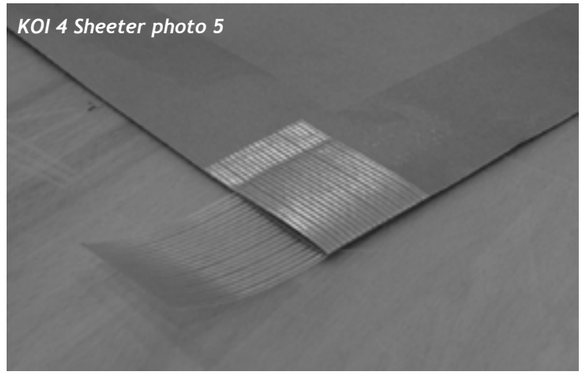
KOI 4 Sheeter photo 5

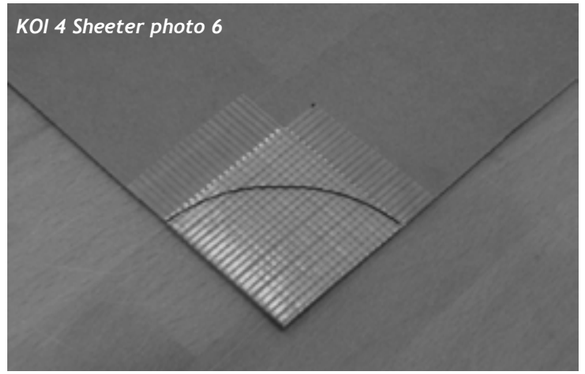
KOI 4 Sheeter photo 6

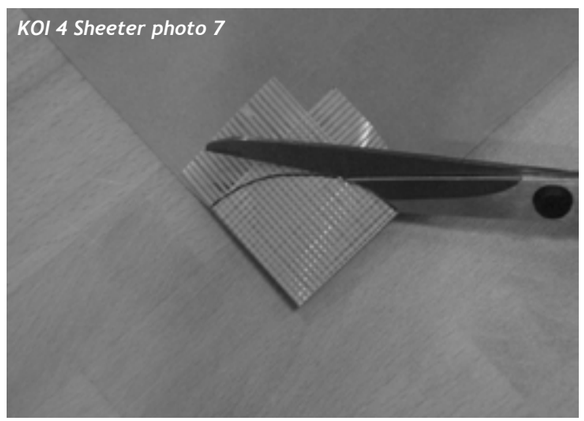
KOI 4 Sheeter photo 7

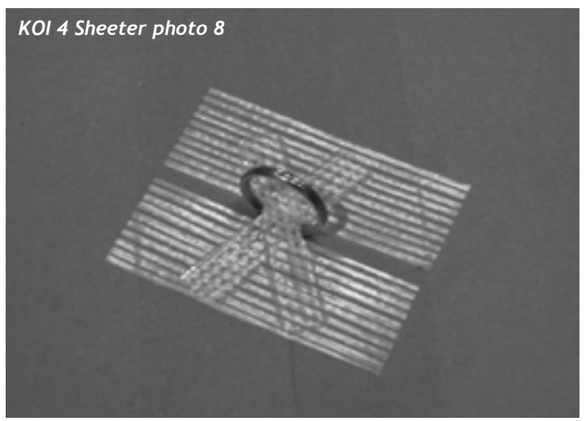
KOI 4 Sheeter photo 8

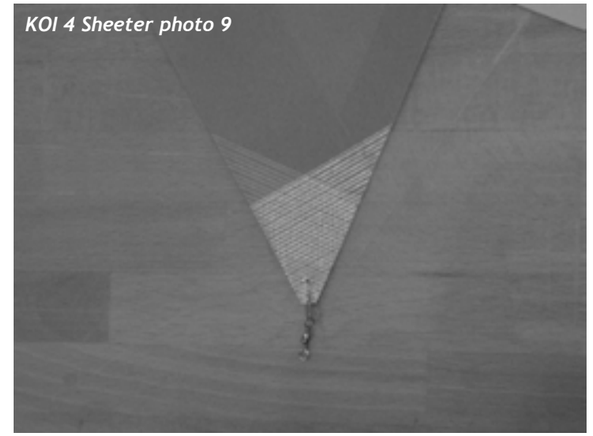
KOI 4 Sheeter photo 9

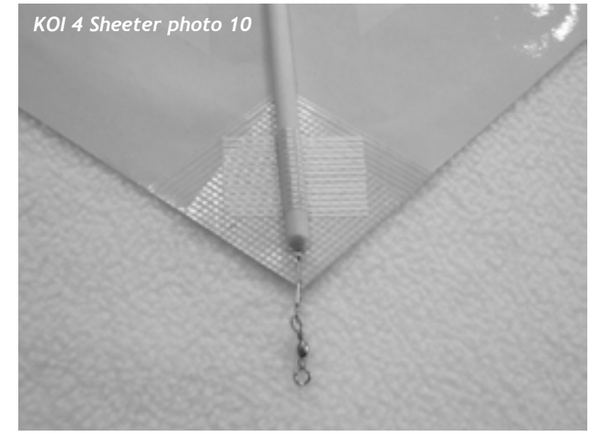
KOI 4 Sheeter photo 10

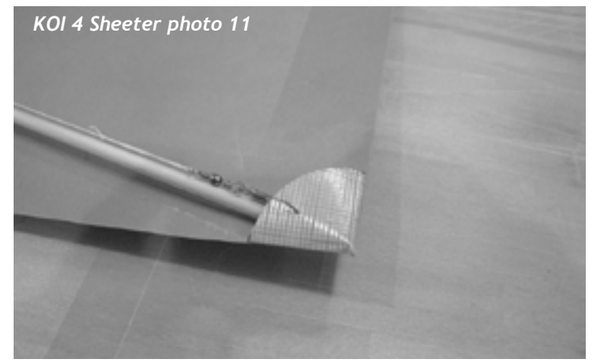
KOI 4 Sheeter photo 11

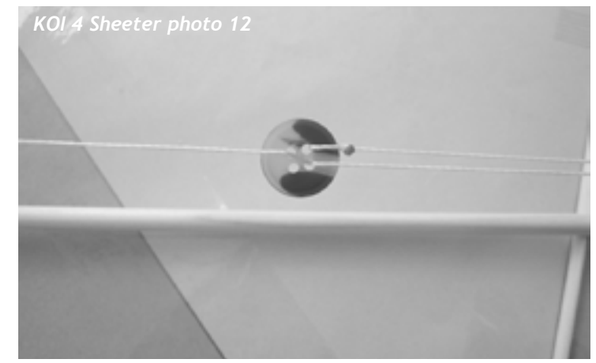
KOI 4 Sheeter photo 12


Ron Petralito teaching at last winter's Maryland Kite Society Retreat.